STREAMLINE TABLE LAMP

SKU:CAMORO-201-9273.1

WEIGHT
Net Weight: 8kg | 17.6 lbs
Gross Weight: 10kg | 22 lbs

BULBS
Quantity: 1
Type: E27
Wattage: 40W (max)

MATERIALS
Body: Iron
Details: Brass

LAMPSHADE
Type: 21194AL

PACKING (approx.)
Dimensions: 37 x 37 x 60 cm
14.6 x 14.6 x 23.6 in
Volume: 0.08 m³ | 2.90 ft³

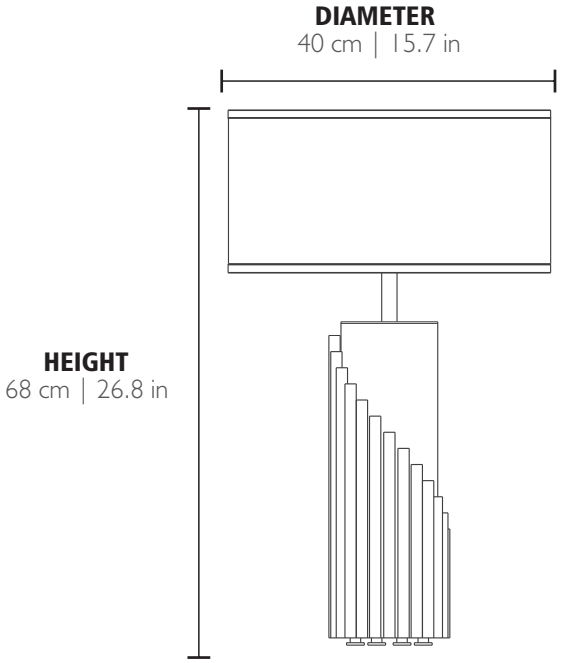

CE - Products manufactured according the European norm of security EN 60 598-1.

- Products adjusted for instalation in surfaces normally inflammable.

- Products of class II. The electric isolation is double or reinforced.

ES - Products with the possibility of instalation of low-energy consuption bulbs.

PRODUCT FINISHES & COSTUMIZATION OPTIONS

www.mondocollection.com
info@mondocollection.com

CUSTOMIZATION OPTIONS

FINISHES

Metal Finishes

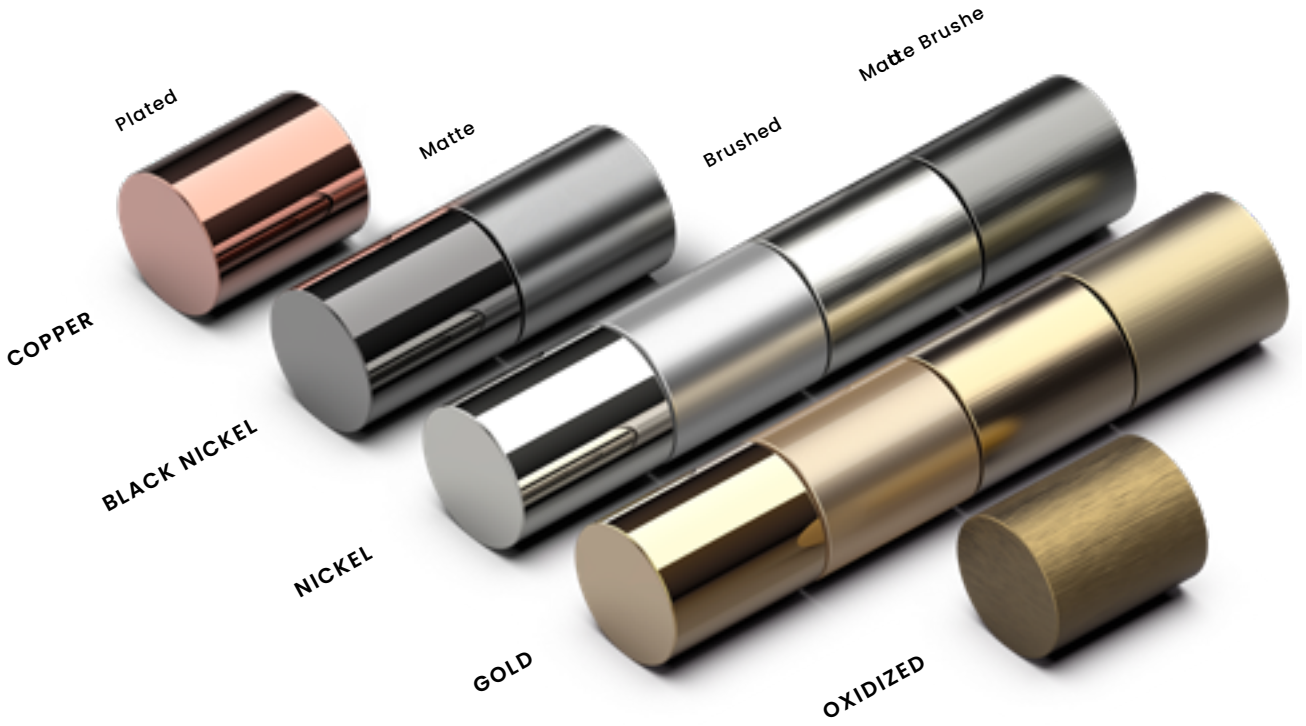

THE IMAGES USED IN THIS CATALOGUE ARE PURELY FIGURATIVE AND THE FINISHES OF THE PIECES MAY BE DIFFERENT.
THEREFORE, WE ENCOURAGE YOU TO CHECK IT WITH YOUR BUSINESS DEVELOPMENT MANAGER.

LAMPSHADE FABRIC options

BLACK RIBBED

SEAMS OF GREY

NUDE PEACH

SYNTHETIC BROWN

Lacquered MDF Colors

White Lacquered

Gold Lacquered

Black Lacquered